UNIVERSITY OF CAMBRIDGE INTERNATIONAL EXAMINATIONS
International General Certificate of Secondary Education

CANDIDATE NAME	

CENTRE NUMBER						CANDIDATE NUMBER					

PHYSICS **0625/02**

Paper 2 Core **October/November 2008**

1 hour 15 minutes

Candidates answer on the Question Paper.

No Additional Materials are required.

READ THESE INSTRUCTIONS FIRST

Write your Centre number, candidate number and name on all the work you hand in.
Write in dark blue or black pen.
You may use a soft pencil for any diagrams, graphs or rough working.
Do not use staples, paper clips, highlighters, glue or correction fluid.
DO **NOT** WRITE IN ANY BARCODES.

Answer **all** questions.
You may lose marks if you do not show your working or if you do not use appropriate units.
Take the weight of 1 kg to be 10 N (i.e. acceleration of free fall = 10 m/s^2).

At the end of the examination, fasten all your work securely together.
The number of marks is given in brackets [ ] at the end of each question or part question.

For Examiner's Use	
1	
2	
3	
4	
5	
6	
7	
8	
9	
10	
11	
12	
Total	

This document consists of **16** printed pages.

SP (NF/CGW) T41976/4
© UCLES 2008

UNIVERSITY of CAMBRIDGE International Examinations

[Turn over

www.root19.com +91 - 9969 353 391

For Examiner's Use

1 A boy is fishing in a river. Nearby, a ferry-boat is taking passengers backwards and forwards across the river.

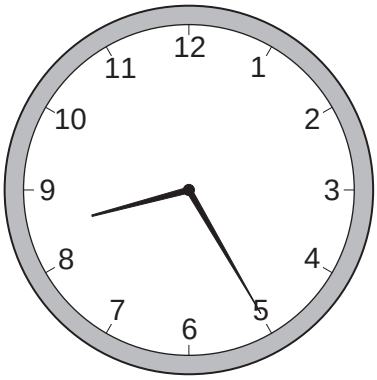

Fig. 1.1

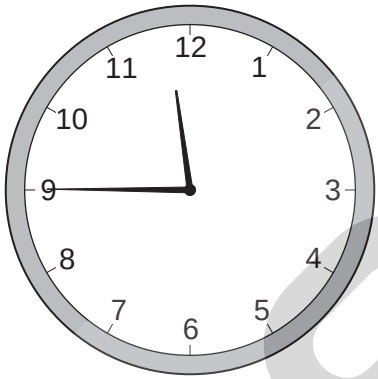

Fig. 1.2

When he starts fishing one morning, the boy's wristwatch is as shown in Fig. 1.1.
When he finishes his morning's fishing, the wristwatch is as shown in Fig. 1.2.

(a) For how many minutes was the boy fishing?

number of minutes = ... [3]

(b) It takes the ferry-boat 20 minutes to load up passengers, take them across the river, load up with passengers at the other side, and return, to start all over again.
Calculate how many journeys, across the river and back, the ferry made whilst the boy was fishing.

number of journeys = ... [2]

[Total: 5]

www.roots19.com +91 - 9969 353 391

For Examiner's Use

2 The tank in Fig. 2.1 measures 2.0 m × 1.5 m × 1.0 m. It is full of water.

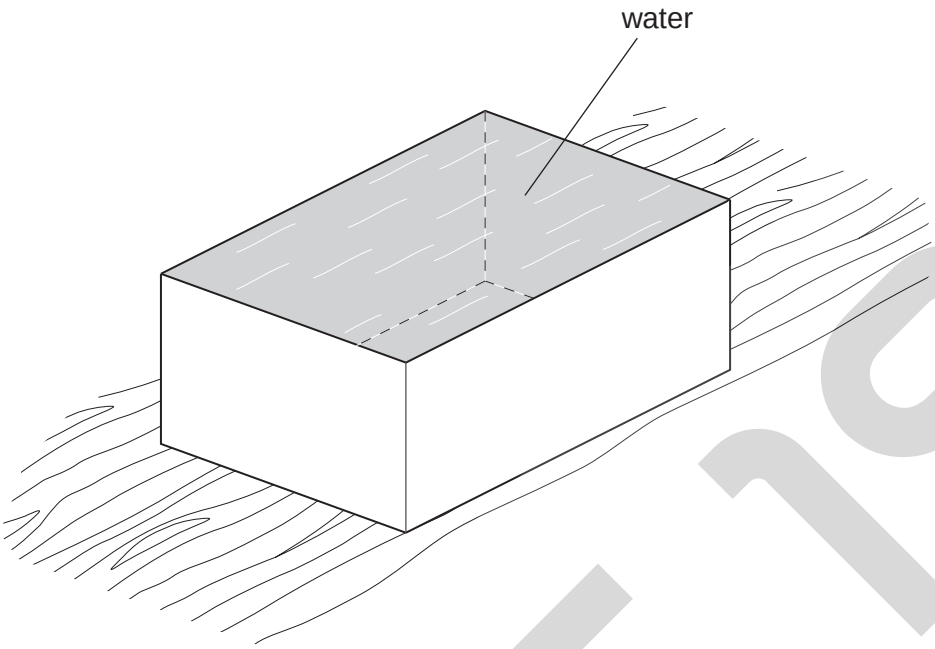

Fig. 2.1

(a) Calculate the volume of the tank.

volume = ... [3]

(b) Water has a density of 1000 kg/m^3.
Calculate the mass of water in the tank.

mass = ... [3]

[Total: 6]

www.rootlg.com +91 - 9000350591

For Examiner's Use

3 A spring is hung from a beam, and a load is suspended from it.
Fig. 3.1 shows the spring before and after suspending the load.

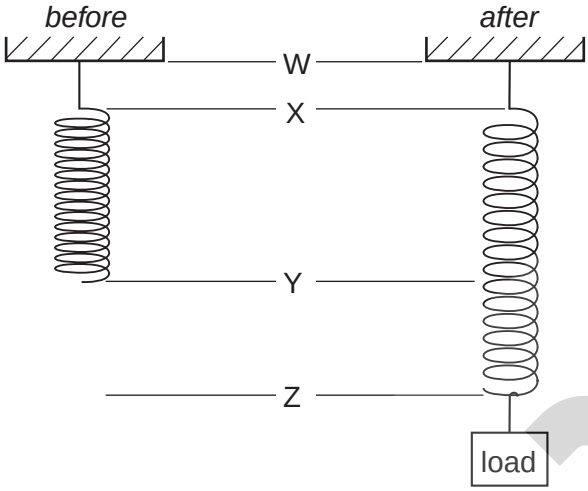

Fig. 3.1

(a) Using the letters on Fig. 3.1, state which distance you would need to measure in order to find the extension of the spring.

distance = ... [1]

(b) An experimenter measures the extension of the spring with different loads, and obtains the graph shown in Fig. 3.2.

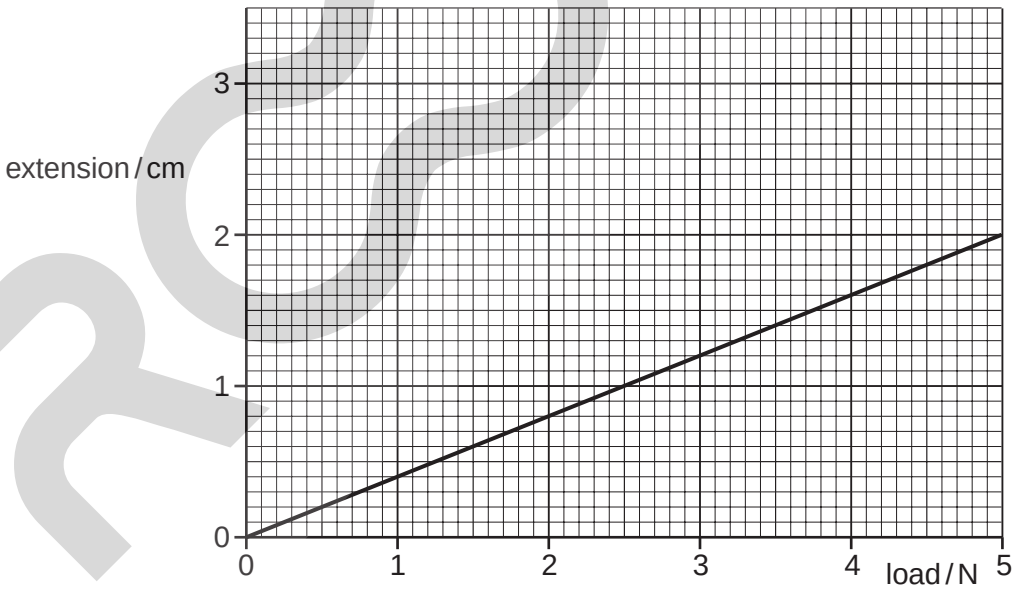

Fig. 3.2

(i) When the experimenter hangs an unknown load on the spring, the extension of the spring is 1.7 cm.
Use Fig. 3.2 to find the weight of the unknown load.

weight = ... N [1]

For Examiner's Use

(ii) State the value of the tension in the spring when this load is hanging from it.

tension = ... [2]

(iii) The load is pulled down further.
State what happens to the tension in the spring.

..... [1]

(iv) After being pulled down, the load is released.
State what happens to the load immediately after it is released.

.....

..... [1]

[Total: 6]

www.root19.com +91 - 9000390091

For Examiner's Use

4 Fig. 4.1 represents the regions of the electromagnetic spectrum, with an enlargement of the visible light part of the spectrum.

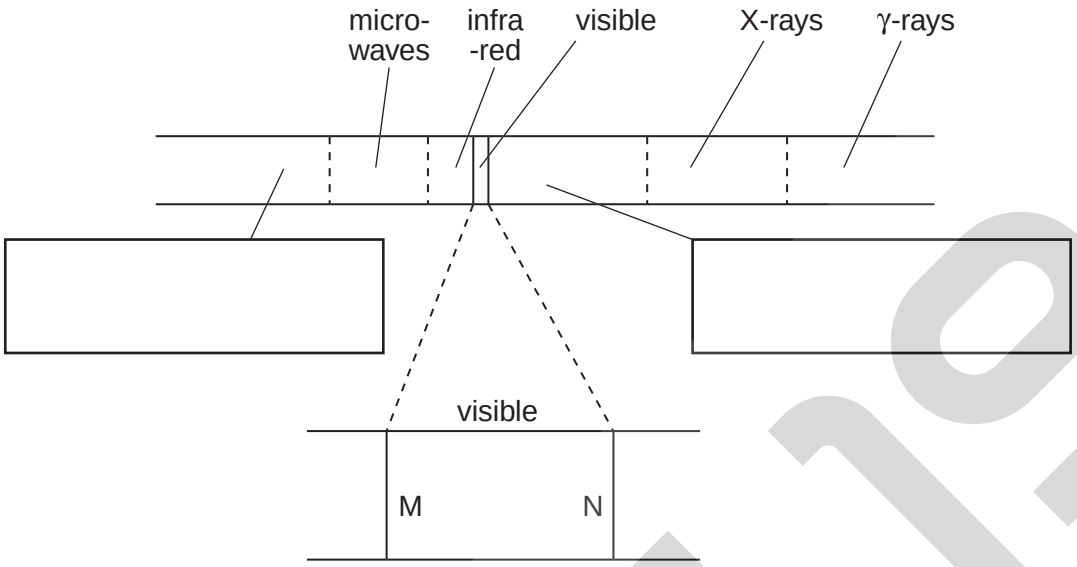

Fig. 4.1

(a) Two of the regions have not been named in Fig. 4.1.
In the two boxes below the spectrum, write the names of these regions. [2]

(b) Write "long wavelength" next to the long wavelength end of the electromagnetic spectrum. [1]

(c) State one use for the radiation of each of the following regions.

microwaves .....

infra-red .....

γ-rays .....
[3]

(d) State the colour you would expect to find

(i) at end M of the visible spectrum, ...

(ii) at end N of the visible spectrum. .....
[2]

[Total: 8]

www.rootn9.com +91 - 9969 353 391

For Examiner's Use

5 **(a)** Make the following sentences about sound echoes correct by crossing out the incorrect alternatives. An example has been given to help you.

(example) An echo is caused when a sound wave hits a large ~~small~~ ~~thin~~ obstacle.

(i) An echo is a sound wave which is reflected / refracted / dispersed by an obstacle. [1]

(ii) An echo from a stationary obstacle has
a greater frequency than
the same frequency as
a smaller frequency than
the sound hitting the obstacle. [1]

(b) Two students, A and B, are trying to use echoes to enable them to measure the speed of sound. Student A has two blocks of wood that make a loud sound when banged together. Student B has a stopwatch. They stand 240 m from the school wall, as shown in Fig. 5.1.

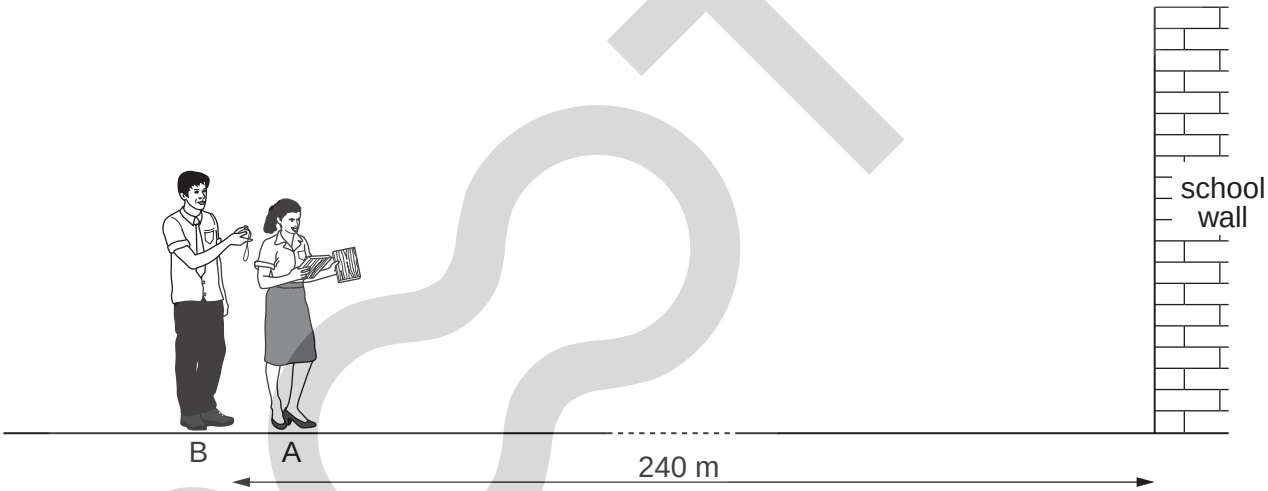

Fig. 5.1

Student A bangs the blocks together and, at the same time, B starts the stopwatch. B stops the stopwatch when he hears the echo. The watch then reads 1.6 s.

(i) How far did the sound travel during the 1.6 s? ..... m [1]

(ii) Calculate the speed of sound.

speed of sound = ... m/s [3]

For Examiner's Use

(iii) The students expected that the value for the speed of sound would be closer to 330 m/s.

Suggest two reasons that might explain why the students' value was different from what was expected.

1. .....

2. ..... [2]

[Total: 8]

6 Fig. 6.1 shows two mercury barometers standing side by side. The right-hand diagram is incomplete. The space labelled X is a vacuum.

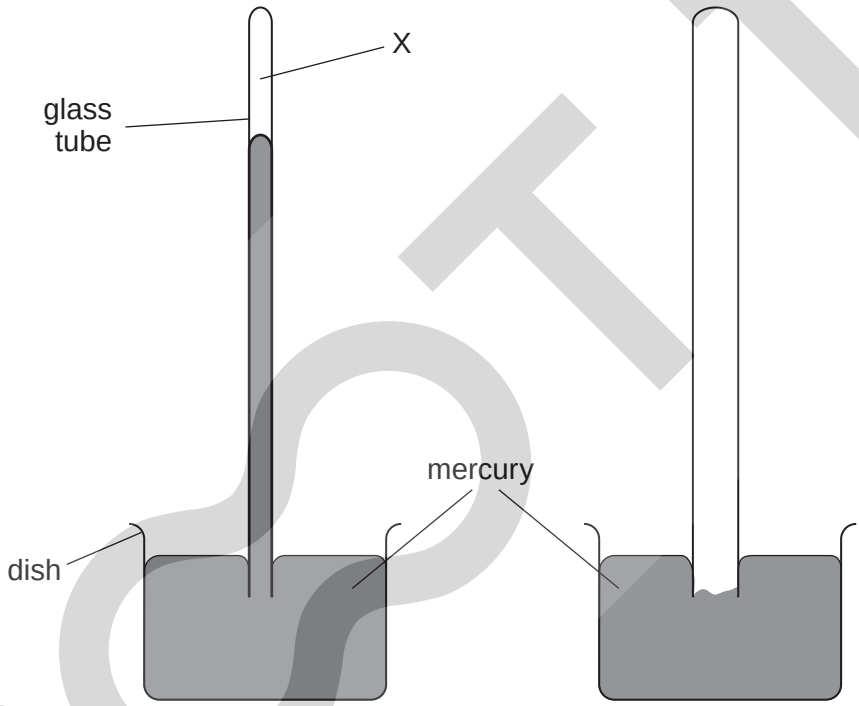

Fig. 6.1

(a) On the left-hand barometer, carefully mark the distance that would have to be measured in order to find the value of the atmospheric pressure. [2]

(b) A small quantity of air is introduced into X.

(i) State what happens to the mercury level in the tube.

..... [1]

(ii) In terms of the behaviour of the air molecules, explain your answer to **(b)(i)**.

.....

..... [2]

(c) The space above the mercury in the right-hand barometer is a vacuum.
On Fig. 6.1, mark the level of the mercury surface in the tube. [1]

For Examiner's Use

(d) The left-hand tube now has air above the mercury; the right-hand tube has a vacuum. Complete the table below, using words chosen from the following list, to indicate the effect of changing the external conditions.

rises **falls** **stays the same**

change	effect on the level of the mercury in the left-hand tube	effect on the level of the mercury in the right-hand tube
atmospheric pressure rises		
temperature rises		

[4]

[Total: 10]

7 This question requires the use of a ruler or other straight edge. Fig. 7.1 shows a ray of light striking a plane mirror.

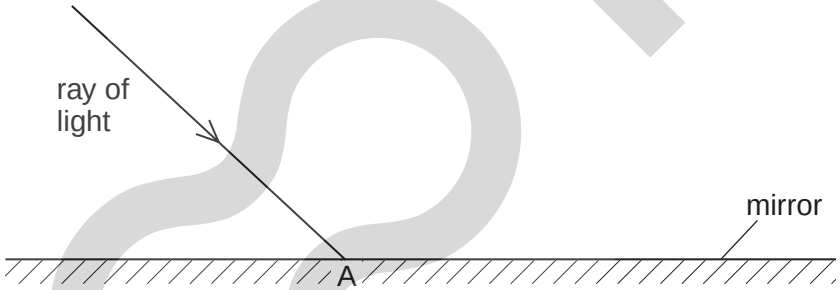

Fig. 7.1

(a) On Fig. 7.1,

(i) draw the normal to the mirror at A, [1]

(ii) draw the path of the reflected ray, [1]

(iii) mark and label the angle of incidence, i, [1]

(iv) mark and label the angle of reflection, r. [1]

(b) State the equation that links i and r.

..... [1]

(c) On Fig. 7.1

(i) draw another mirror which is perpendicular to the one in the diagram and 2 cm to the right of A, [1]

(ii) draw the path of the ray of light after reflection from this second mirror. [1]

[Total: 7]

www.root19.com +91 - 9966399391

For Examiner's Use

8 **(a)** An iron rod is placed next to a bar magnet, as shown in Fig. 8.1.

Fig. 8.1

(i) On Fig. 8.1, mark clearly the north pole and the south pole that are induced in the iron rod. [1]

(ii) What happens to the magnet and the rod? Tick one box.

nothing ☐
they attract ☐
they repel ☐ [1]

(b) A second bar magnet is now placed next to the iron rod, as shown in Fig. 8.2.

Fig. 8.2

(i) On Fig. 8.2, mark clearly the magnetic poles induced in the iron rod. [1]

(ii) What happens to the iron rod and the second magnet? Tick one box.

nothing ☐
they attract ☐
they repel ☐ [1]

(c) The iron rod is removed, leaving the two magnets, as shown in Fig. 8.3.

Fig. 8.3

What happens to the two magnets? Tick one box.

nothing ☐
they attract ☐
they repel ☐ [1]

www.root19.com +91 - 9969 353 391

For Examiner's Use

(d) The second magnet is removed and replaced by a charged plastic rod, as shown in Fig. 8.4.

Fig. 8.4

What happens to the magnet and the plastic rod? Tick one box.

nothing ☐

they attract ☐

they repel ☐ [1]

[Total: 6]

ROOT 19

For Examiner's Use

9 A toymaker wires a circuit in a toy house, so that a 6 V lamp can be switched on using either switch 1 at the bottom of the stairs or switch 2 at the top of the stairs.
The circuit is shown in Fig. 9.1.

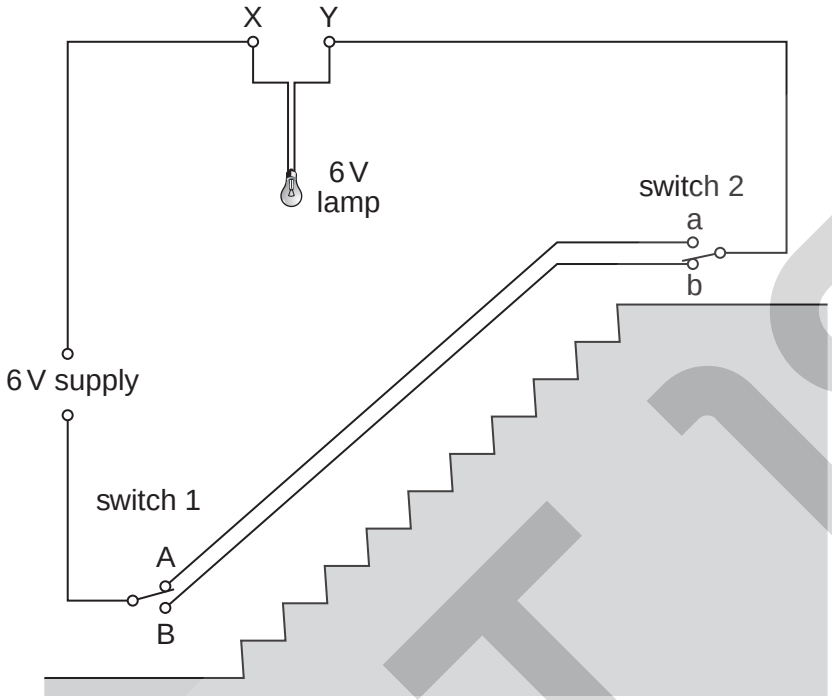

Fig. 9.1

(a) When switch 1 is in position A, what is the position of switch 2 so that the lamp is lit?

..... [1]

(b) When switch 2 is in position b, what is the position of switch 1 so that the lamp is lit?

..... [1]

(c) The lamp has a resistance of 4.0 Ω.

Calculate the current in the circuit.

current = ... [4]

For Examiner's Use

(d) The toymaker decides he wants to have two 6V lamps in the circuit with the 6V supply.

Which of the following means of connecting the lamps between X and Y, shown in Fig. 9.2, is the best? Give two reasons for your answer.

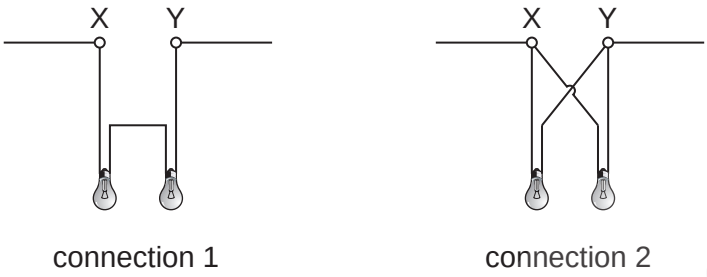

connection 1 connection 2

Fig. 9.2

Which is best? .....

Reason 1 .....

Reason 2 ..... [3]

[Total: 9]

www.root19.com
© UCLES 2019

+91 - 9966399391

For Examiner's Use

10 The circuit in Fig. 10.1 shows an electromagnetic relay being used to switch an electric motor on and off. The relay coil has a much greater resistance than the potential divider.

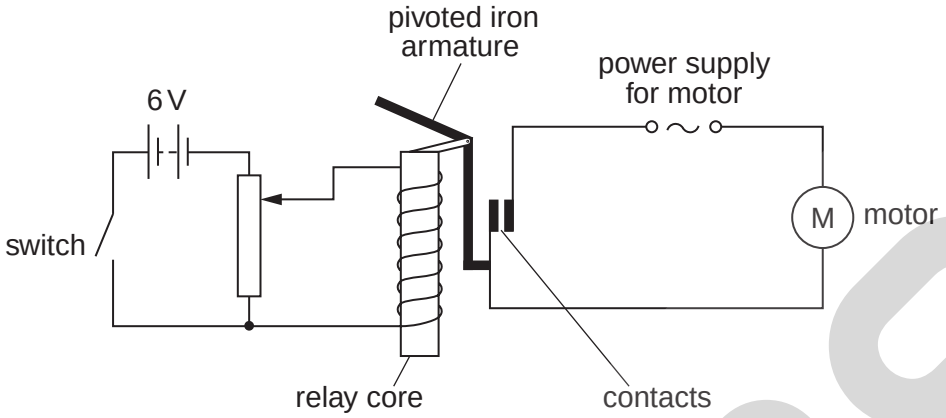

Fig. 10.1

(a) The relay operates when there is a potential difference of 3 V across the coil.
On Fig. 10.1, mark the position of the slider of the potential divider when the relay just operates. [1]

(b) Describe how the relay closes the contacts in the motor circuit.

.....

.....

.....

.....

..... [3]

[Total: 4]

www.roots19.com +91 - 9969 353 391

For Examiner's Use

11 Fig. 11.1 shows a transformer being used to operate a 6V lamp from a 240V mains supply.

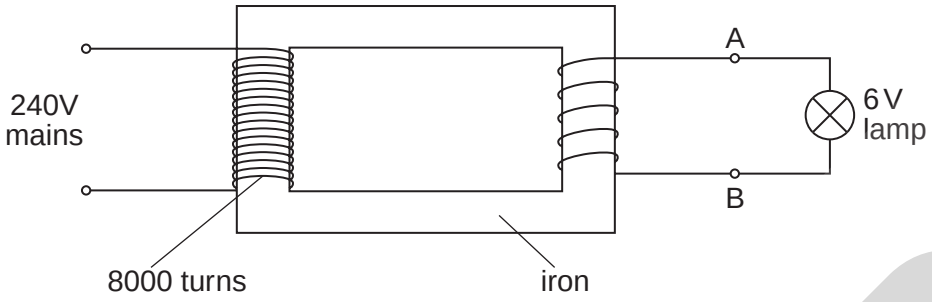

Fig. 11.1

(a) What name is given to the piece of iron that links the two coils?

..... [1]

(b) For the transformer to operate, must the mains supply be a.c., d.c., or doesn't it matter?

..... [1]

(c) Using the information on Fig. 11.1, calculate the number of turns on the secondary coil.

number of turns = ... [3]

(d) State why it would not be wise to connect a 1.5V lamp between A and B.

..... [1]

[Total: 6]

www.roots19.com
© UCLES 2010

+91 - 9966399391

For Examiner's Use

12 The nucleus of one of the different nuclides of polonium can be represented by the symbol

$$^{218}_{84}Po$$

(a) State the proton number of this nuclide. ..... [1]

(b) State the nucleon number of this nuclide. ..... [1]

(c) The nucleus decays according to the following equation.

$$^{218}_{84}Po \rightarrow {}^{214}_{82}Pb + \text{emitted particle}$$

(i) State the proton number of the emitted particle. ..... [1]

(ii) State the nucleon number of the emitted particle. ..... [1]

(iii) Name the emitted particle. Tick one box.

- α-particle ☐
- β-particle ☐
- neutron ☐
- proton ☐ [1]

[Total: 5]

Permission to reproduce items where third-party owned material protected by copyright is included has been sought and cleared where possible. Every reasonable effort has been made by the publisher (UCLES) to trace copyright holders, but if any items requiring clearance have unwittingly been included, the publisher will be pleased to make amends at the earliest possible opportunity.

University of Cambridge International Examinations is part of the Cambridge Assessment Group. Cambridge Assessment is the brand name of University of Cambridge Local Examinations Syndicate (UCLES), which is itself a department of the University of Cambridge.

www.root19.com +91 - 9969 353 391